# 1mm Contact Pitch, Board-to-Cable, Board-to-FPC, Board-to-Micro-coaxial Cable Connectors

## DF19 Series

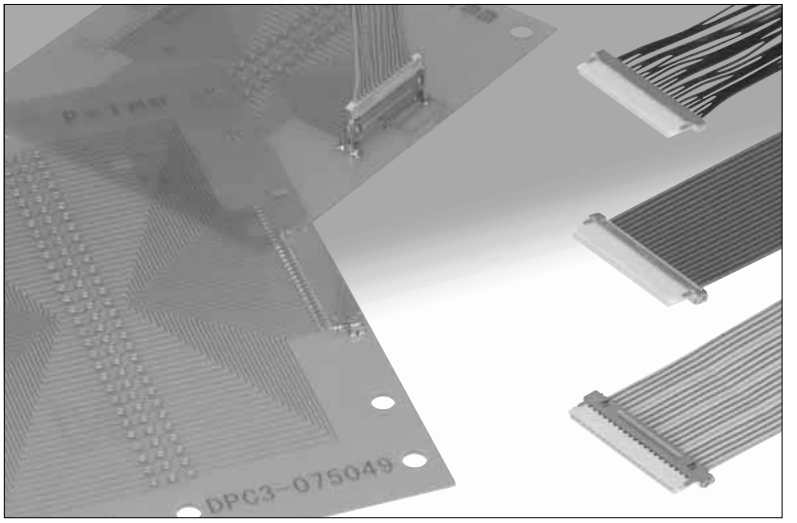


## ■Overview

Industry and market accepted as “De facto” standard for LCD panel connections (panels under 12 inches).
High-performance connectors for LVDS high-speed differential signals.

## ■Features

### 1. Small configuration and board space

Thin design accepts discrete wire, thin micro-coaxial cable (ϕ1.5mm, ϕ1.6mm max.) and FPC 1.7mm maximum thick.

### 2. Common use of receptacle

The same receptacle will accept plugs terminated with discrete wire, FPC or micro-coaxial cable.

### 3. Uniform external dimensions

The plug assembly external dimensions remain the same when is terminated with discrete wire, FPC or micro-coaxial cable.

### 4. Variety of mounting styles

Device design engineers have a choice of mounting styles : top-board, offset, reverse mount offset and vertical.

### 5. Ground connection

Metal grounding plates connect with the common ground line.

### 6. Glow wire compliance (Compliant with IEC60695-2-11)

## ■Applications

LCD connections in small consumer devices : digital cameras, notebook computers, PDA’s. Any device requiring high-density interconnection for consistent high speed transmission data rates.

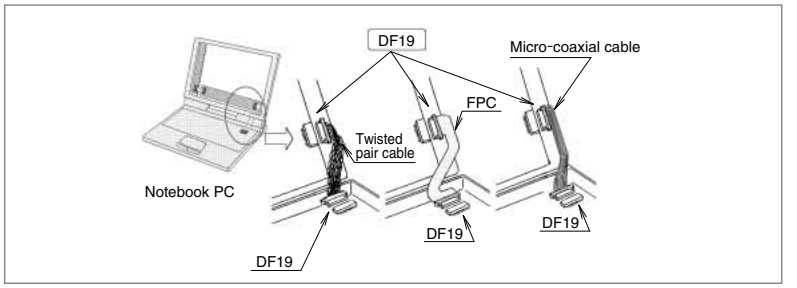


**Small configuration and board space**

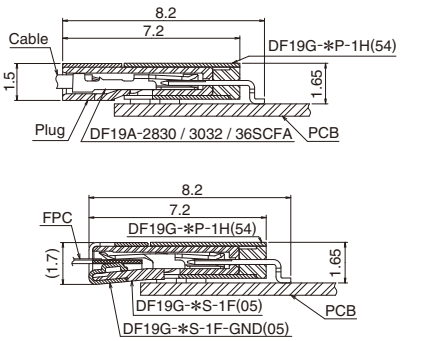


**Horizontal mounting**

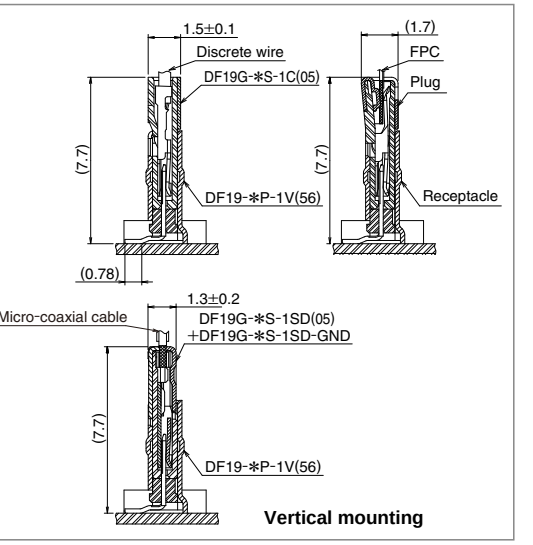


**Vertical mounting**

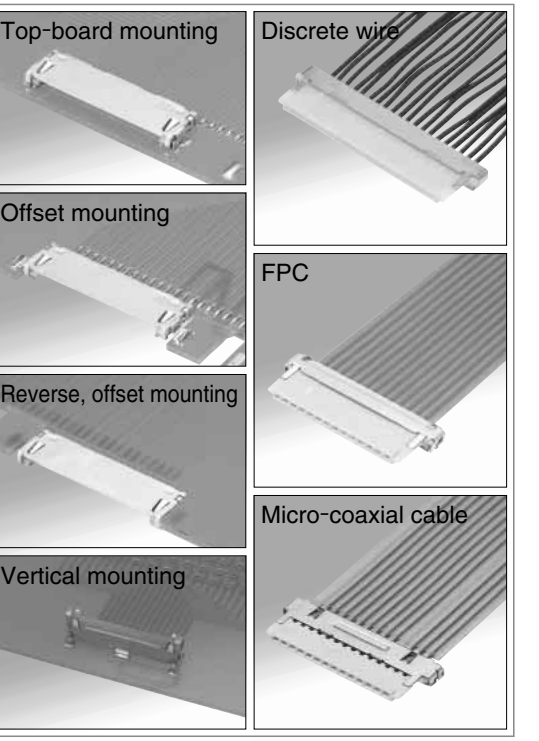


Jul.1.2019 Copyright 2019 HIROSE ELECTRIC CO., LTD. All Rights Reserved.

In cases where the application will demand a high level of reliability, such as automotive, please contact a company representative for further information.

## ■Product Specifications

| | | | | | | |
|---|---|---|---|---|---|---|
| Rating | Current rating | 28 AWG : 1A<br>30 AWG : 0.9A<br>32 AWG : 0.8A<br>36 AWG : 0.5A<br>FPC : 0.5A<br>Micro-coaxial cable 40 AWG : 0.3A | Operating temperature range | -35℃ to 85℃ Note 1<br>Note 2 | Storage temperature range | -10℃ to 60℃ Note 2 |
| | Voltage rating | 100V AC | Operating humidity range | 20% to 80% | Storage humidity range | 40% to 70% |

| Item | Specification | Conditions |
|---|---|---|
| 1.Insulation resistance | 500MΩ min. | 100 V DC |
| 2.Withstanding voltage | No flashover or insulation breakdown. | 300 V AC / one minute |
| 3.Contact resistance | 30mΩ max. (50mΩ max. for FPC) | 100 mA |
| 4.Insertion-Extraction force (per contact) | Min. 0.2N, Max. 3N | Measured with a steel pin $\phi$0.2±0.005 |
| 5.Vibration | No electrical discontinuity of 1$\mu$s or more. | Frequency : 10 to 55 Hz, single amplitude of 0.75mm, 2 hours in each of the 3 directions. |
| 6.Humidity (Steady state) | Contact resistance : 30mΩ max. (50mΩ max. for FPC)<br>Insulation resistance : 500MΩ min. | 96 hours at temperature of 40±2℃ and humidity of 90% to 95% |
| 7.Temperature cycle | Contact resistance : 30mΩ max. (50mΩ max. for FPC)<br>Insulation resistance : 500MΩ min. | Temperature : −55℃ → +5℃ to +35℃ → +85℃ → +5℃ to +35℃<br>Time (Minutes) : 30 → 10 → 30 → 10 5 cycles |
| 8.Durability (insertion/ withdrawal) | Contact resistance : 30mΩ max. (50mΩ max. for FPC) | 30 cycles |
| 9.Resistance to soldering heat | No deformation of the insulator parts affecting performance. | Re-flow soldering : At the recommended temperature profile<br>Manual soldering : Soldering iron temperature 300℃, 3 seconds |

Note1 : Includes temperature rise caused by current flow.

Note2 : The term “storage” refers to connectors stored for long period of time prior to mounting and use. Operating Temperature Range and Humidity range covers non-conducting condition of installed connectors in storage, shipment or during transportation.

## ■Materials / Finish

| Product | Component | Material | Finish/Color | Remarks |
|---|---|---|---|---|
| Receptacle | Insulator | Polyamide | Black or Beige | UL94V-0 |
| | Contacts | Phosphor bronze | Gold plated | ——— |
| | Grounding plate | Phosphor bronze | Tin plated or Tin-copper plated | ——— |
| Plug | Insulator | Polyamide | Beige | ——— |
| | Tin-lead plated | Stainless steel | Tin-copper plated | ——— |
| Crimp contact | Contact | Phosphor bronze | Gold Plated | ——— |
| Plug for PPC | Insulator | Polyamide | Beige | UL94V-0 |
| | Contact | Phosphor bronze | Gold plated | ——— |
| Grounding plate for PPC | Grounding plate | Stainless steel | Tin-copper plated | ——— |
| Plug for micro-coaxial cable | Insulator | LCP | Beige | UL94V-0 |
| | Contact | Phosphor bronze | Gold plated | ——— |
| | Grounding plate | Phosphor bronze | Tin plated | ——— |
| Grounding plate for micro-coaxial cable | Grounding plate | Phosphor bronze | Tin plated | ——— |

Jul.1.2019 Copyright 2019 HIROSE ELECTRIC CO., LTD. All Rights Reserved.

## ■Product Number Structure

Refer to the chart below when determining the product specifications from the product number.
Please select from the product numbers listed in this catalog when placing orders.

### ● Connector

**DF19 # - ✻ P - 1 H**
❶ ❷ ❸ ❹ ❺ ❻

**DF19 # - ✻ S - 1 F - GND**
❶ ❷ ❸ ❹ ❺ ❻ ❼

| | |
|---|---|
| ❶ Series Name : DF19 | ❸ Number of contacts : 8,14,20,30 (Note 1) |
| ❷ Configuration<br>■Receptacle<br>G : Top-board mounting (1.65mm high)<br>K : Offset mounting (1.0mm high)<br>L : Offset mounting (1.1mm high)<br>KR : Reverse offset mounting version of DF19K (1.0mm high)<br>■Plug for discrete wire<br>Blank : No grounding plate<br>G : With grounding plate<br>■Plug for FPC<br>G : With grounding plate<br>■Grounding plate for FPC<br>G : With grounding plate<br>■Plug for micro-coaxial cable<br>G : With grounding plate<br>■Grounding plate for micro-coaxial cable<br>G : With grounding plate | ❹ Connector type<br>S : Plug<br>P : Receptacle<br>❺ Contact pitch : 1mm<br>❻ Mounting type/Termination type<br>H : Horizontal SMT<br>V : Vertical SMT<br>C : Plug – discrete wire (crimp contact)<br>F : Plug – FPC<br>SD : Plug – micro-coaxial cable<br>❼ Additional separate component<br>GND : Ground plate (Note 2) |

Note 1 : Number of contacts will differ depending on the connector style.
Note 2 : Grounding plates are required when terminating with the FPC and micro-coaxial cable.

### ●Contact

**DF19A - 2830 SCF A (✻✻)**
❶ ❷ ❸ ❹

| | |
|---|---|
| ❶ Conductor size<br>2830 : 28 to 30 AWG<br>3032 : 30 to 32 AWG<br>36 : 36 AWG | ❸ Plating<br>A : Gold |
| ❷ Contact type<br>SCF : Plug contact, tape and reel packaging | ❹ Packaging<br>Blank : 10,000 pcs/reel<br>(41) : 20,000 pcs/reel |

Jul.1.2019 Copyright 2019 HIROSE ELECTRIC CO., LTD. All Rights Reserved.

## ■Right angle receptacle, top-board mounting

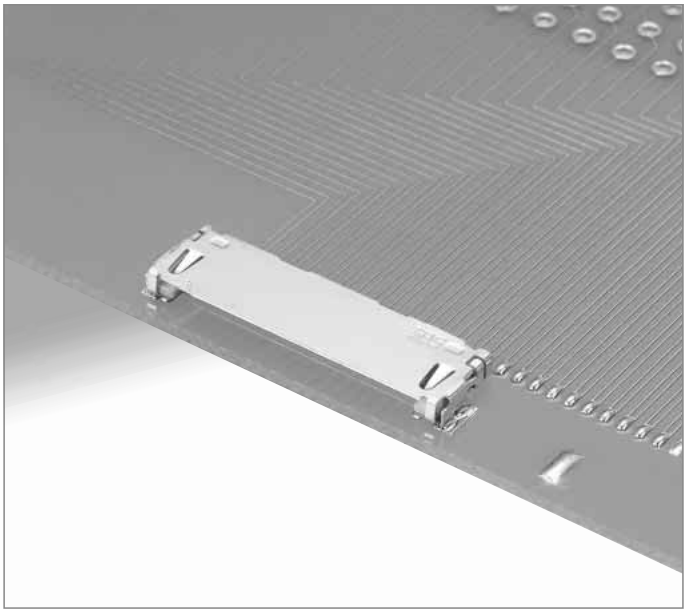

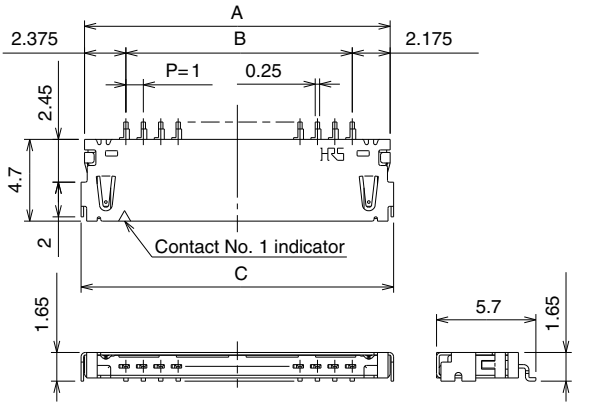


## ◆PCB mounting pattern

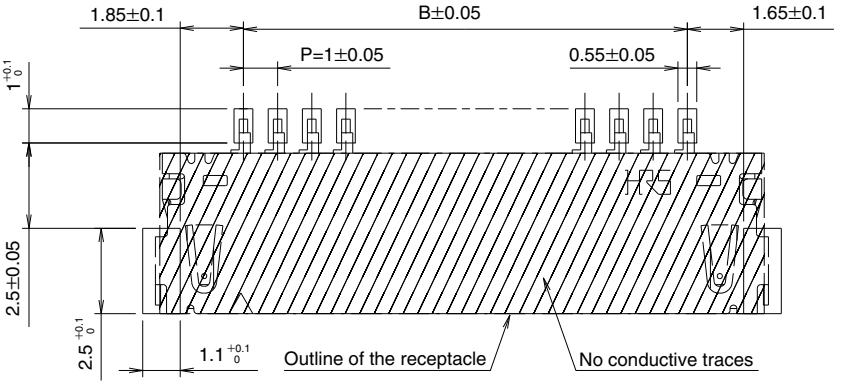


Specification
(54) : Tape & reel packaging
(1,000 pcs/reel)

Unit : mm

| Part No. | HRS No. | No. of contacts | A | B | C | Remarks | RoHS |
|---|---|---|---|---|---|---|---|
| DF19G- 8P-1H (54) | 685-0021-0 54 | 8 | 11.55 | 7 | 11.95 | 1.65mm high | YES |
| DF19G-14P-1H (54) | 685-0004-0 54 | 14 | 17.55 | 13 | 17.95 | | |
| DF19G-20P-1H (54) | 685-0006-6 54 | 20 | 23.55 | 19 | 23.95 | | |
| DF19G-30P-1H (54) | 685-0015-7 54 | 30 | 33.55 | 29 | 33.95 | | |

Note : Order by number of reels.

Jul.1.2019 Copyright 2019 HIROSE ELECTRIC CO., LTD. All Rights Reserved.

## ◆Embossed Carrier Tape Dimensions Receptacles

**●DF19G-∗P-1H(54)**
**●DF19K-∗P-1H(54)**
**●DF19L-∗P-1H(54)**

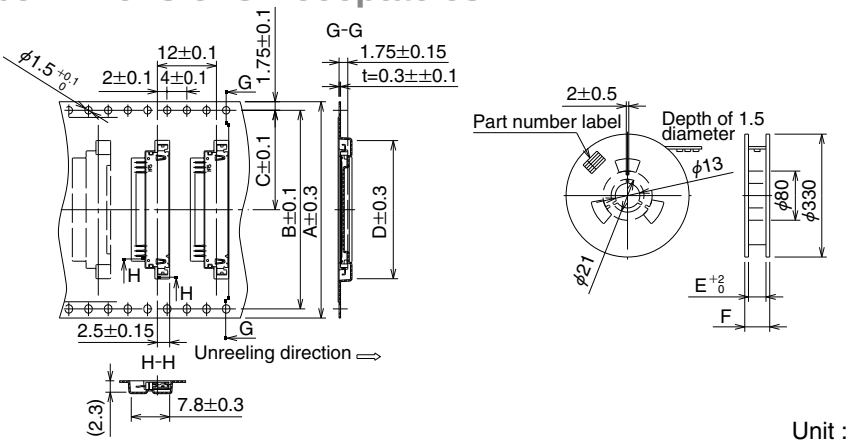


Unit : mm

| Connector | No. of contacts | A | B | C | D | E | F | Remarks |
|---|---|---|---|---|---|---|---|---|
| DF19G- 8P-1H(54) | 8 | 24 | ——— | 11.5 | 16.1 | 24.4 | 30.4 | Top-board mounting (1.65mm high) |
| DF19G-14P-1H(54) | 14 | 44 | 40.4 | 20.2 | 22.1 | 44.4 | 50.4 | |
| DF19G-20P-1H(54) | 20 | 44 | 40.4 | 20.2 | 28.1 | 44.4 | 50.4 | |
| DF19G-30P-1H(54) | 30 | 56 | 50.2 | 26.2 | 38.1 | 56.4 | 62.4 | |
| DF19K-20P-1H(54) | 20 | 44 | 40.4 | 20.2 | 28.1 | 44.4 | 50.4 | Offset mounting (1.0mm high) |
| DF19K-30P-1H(54) | 30 | 56 | 52.4 | 26.2 | 38.1 | 56.4 | 62.4 | |
| DF19L-14P-1H(54) | 14 | 44 | 40.4 | 20.2 | 22.1 | 44.4 | 50.4 | Offset mounting (1.1mm high) |
| DF19L-20P-1H(54) | 20 | 44 | 40.4 | 20.2 | 28.1 | 44.4 | 50.4 | |
| DF19L-30P-1H(54) | 30 | 56 | 52.4 | 26.2 | 38.1 | 56.4 | 62.4 | |

**●DF19KR-∗P-1H(54)**

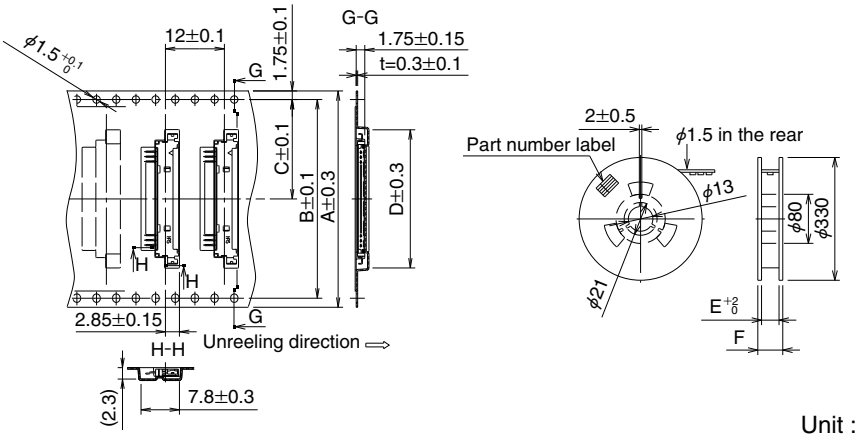


Unit : mm

| Connector | No. of contacts | A | B | C | D | E | F | Remarks |
|---|---|---|---|---|---|---|---|---|
| DF19KR-14P-1H(54) | 14 | 44 | 40.4 | 20.2 | 22.1 | 44.4 | 50.4 | Reverse type of DF19K |
| DF19KR-20P-1H(54) | 20 | 44 | 40.4 | 20.2 | 28.1 | 44.4 | 50.4 | Offset mounting (1.0mm high) |

**●DF19-∗P-1V(56)**

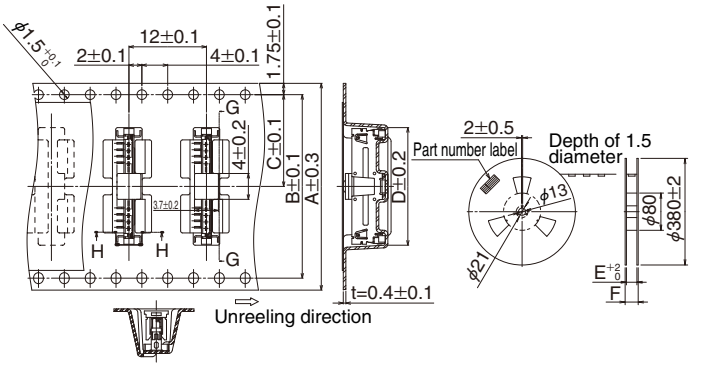


Unit : mm

| Connector | No. of contacts | A | B | C | D | E | F | Remarks |
|---|---|---|---|---|---|---|---|---|
| DF19-14P-1V(56) | 14 | 32 | 28.4 | 14.2 | 18.2 | 32.4 | 38.4 | Vertical receptacle |
| DF19-20P-1H(56) | 20 | 44 | 40.4 | 20.2 | 24.2 | 44.4 | 50.4 | |

Jul.1.2019 Copyright 2019 HIROSE ELECTRIC CO., LTD. All Rights Reserved.